ALL DIMENSIONS ARE TO THE APPARENT INTERSECTION OF THE LINES

STAIN COLOR CHART

- STAIN S30 STAR (BALL MAIN COLOR)
- STAIN SM2900 RED (BALL STITCHING COLOR)

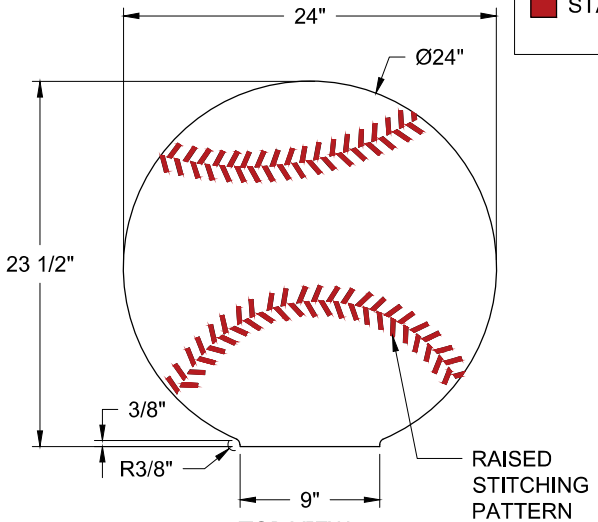

1 TOP VIEW
SCALE: 1 1/2" = 1'

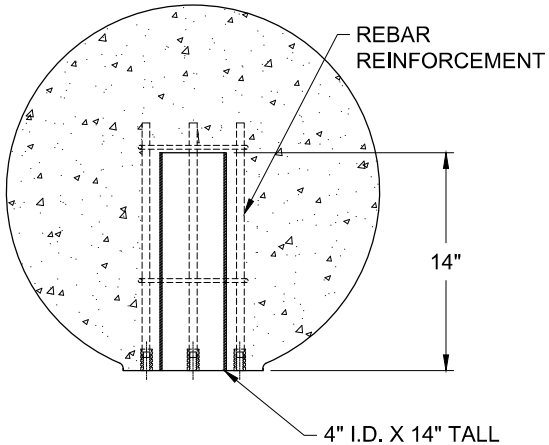

3 SECTION VIEW
SCALE: 1 1/2" = 1'

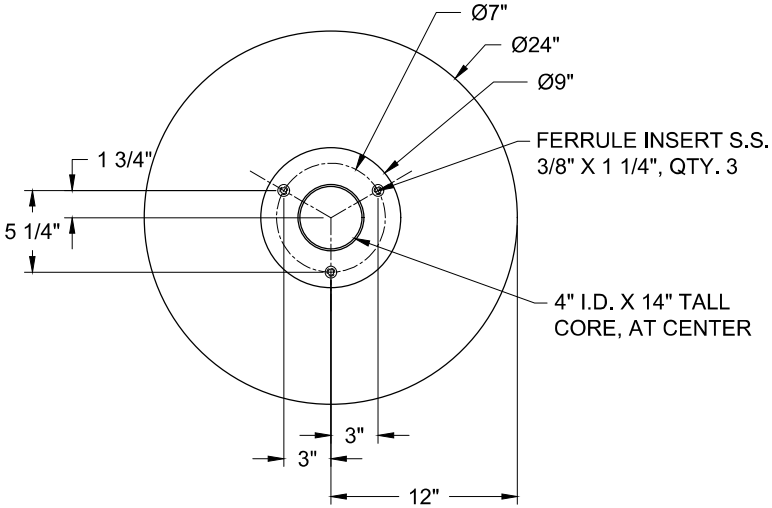

2 BOTTOM VIEW
SCALE: 1 1/2" = 1'
*SHOWN WITHOUT STICHING ON BALL FOR CLARITY

ALL SIDES OF BOLLARD TO BE FINISHED EXCEPT FOR THE BOTTOM PORTION THAT SITS ON GROUND.

WAUSAU TILE
P.O. BOX 1520 WAUSAU, WI 54402-1520
800-388-8728
E-MAIL: WTILE@WAUSAUTILE.COM
WEBSITE: WWW.WAUSAUTILE.COM

REVISIONS

	BY	DATE	NOTES
1			
2			
3			
4			
5			

CONFIDENTIAL INFORMATION
THESE DRAWING, SPECIFICATIONS AND OTHER INFORMATION AND DOCUMENTS ACCOMPANYING THEM ARE THE CONFIDENTIAL AND PROPRIETARY PROPERTY OF WAUSAU TILE, INC. THE DRAWINGS THEMSELVES SHALL BELONG TO THE OWNER FOR USE ONLY ON THE PROJECT. ANY ADDITIONAL USE SHALL REQUIRE THE PRIOR WRITTEN APPROVAL OF WAUSAU TILE, INC. THE PROPRIETARY INFORMATION CONTAINED WITHIN THE DRAWINGS AND THE DOCUMENTS IS AND SHALL REMAIN THE SOLE PROPERTY OF WAUSAU TILE, INC

UNLESS OTHERWISE SPECIFIED DIMENSIONS SHOWN ARE ROUNDED TO THE CLOSEST FRACTION ± 1/16"

FABRICATION TOLERANCE: ± 1/8"

DRAWING SCALE: NOT TO SCALE

JOB NAME

CUSTOMER SIGNATURE REQUIRED

APPROVED: _____

DATE: _____

(SIGNATURE ABOVE ILLUSTRATES YOU HAVE REVIEWED ALL ASPECTS OF THE DESIGN AND APPROVE FABRICATION AS REPRESENTED WITHIN THESE DRAWINGS)

DRAWN BY:	PW
DATE:	11/4/26
STANDARD MOD.DATE:	--/--/-- --
PROJ MNGR:	--
FINISH/COLOR/ SEALER:	-----
WEIGHT (LBS):	750
CO NUMBER:	CO ------
REFERENCE:	TF6202 S30 SM2900